elvorka

Product views & interfaces.

An illustrated reference to product faces, controls, connections and construction details.

07 product families

35 selected source views

97 labelled features

FAMILY INDEX

01 TA6000 — 02-03
PDF p. 8 / printed pp. 15-16

02 EU 230 V — 04-05
PDF p. 1 / EU product sheet

03 TR standard — 06
PDF p. 3 / printed pp. 5-6

04 TR Pro — 07
PDF p. 4 / printed pp. 7-8

05 HP Ultra — 08-09
PDF p. 5 / printed pp. 9-10

06 HP K — 10-11
PDF p. 6 / printed pp. 11-12

07 TB rack — 12
PDF p. 7 / printed pp. 13-14

Reading this reference. Source labels are retained in the selected illustrations, with English feature names beside them. Original Chinese labels remain on the EU map. Source image resolution varies. Illustrations may show representative configurations or different hardware revisions. Full feature descriptions are available in the website product details.

This reference is not a wiring, commissioning or installation guide.

TA6000

10.24-20.48 kWh | TA6000-M2 / TA6000-M3 / TA6000-M4

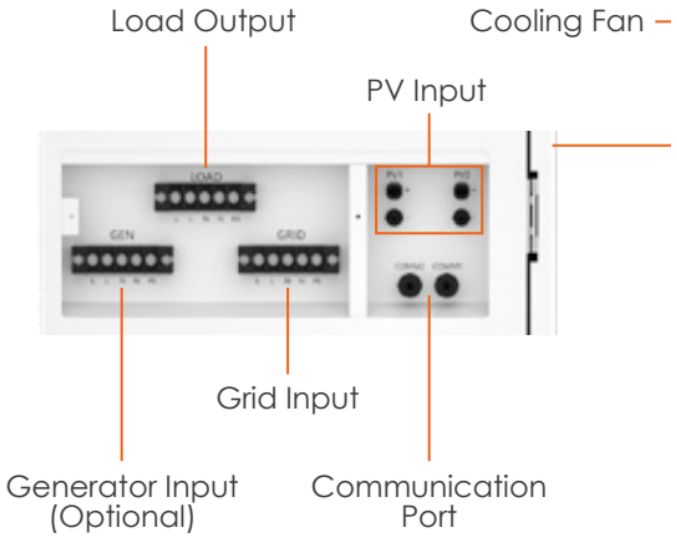

01 / Terminal labels

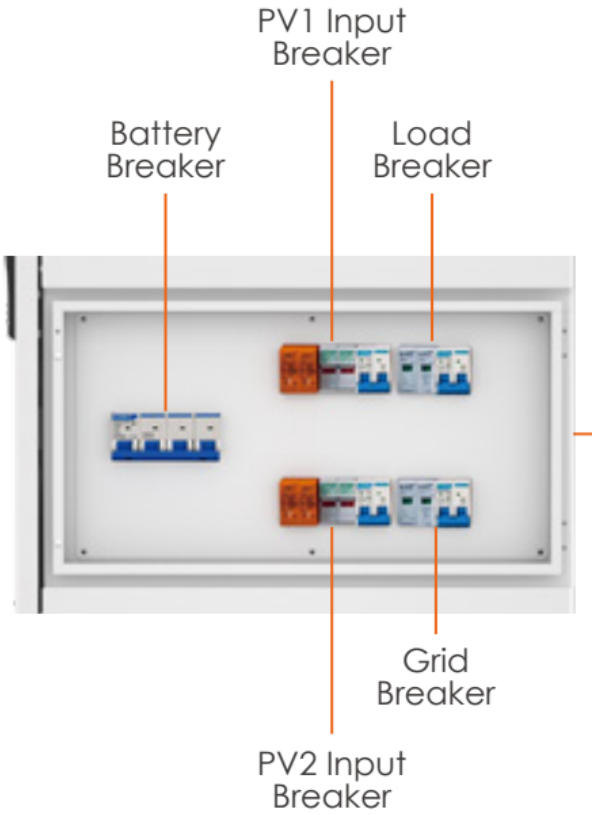

02 / Breaker labels

LABELLED FEATURES

- Load Output
- Grid Input
- Generator Input (optional)
- PV Input
- Communication Port
- Battery Breaker
- PV1 Input Breaker
- PV2 Input Breaker
- Load Breaker
- Grid Breaker

10 labelled features

View coverage. Representative brochure configurations. The source shows terminal/breaker insets and internal cabinet/cell illustrations. These views do not provide a full set of exterior faces, connector pinouts or an installation procedure.

Source: Residential ESS brochure / PDF page 8 / printed pages 15-16

TA6000 / Detail views

10.24-20.48 kWh | TA6000-M2 / TA6000-M3 / TA6000-M4



03 / Upper cabinet / service bay

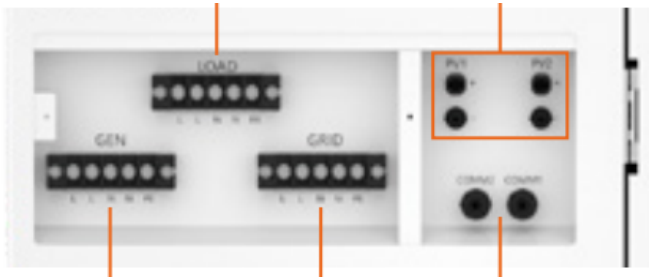

04 / Terminal panel close-up

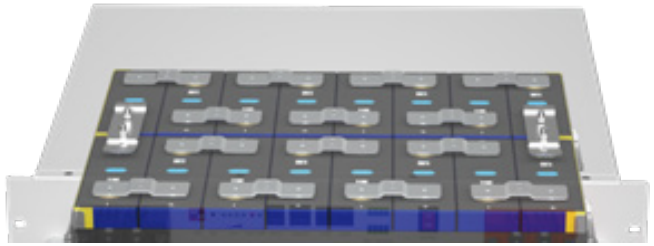

06 / Cell assembly illustration



05 / Breaker compartment close-up

View coverage. Representative brochure configurations. The source shows terminal/breaker insets and internal cabinet/cell illustrations. These views do not provide a full set of exterior faces, connector pinouts or an installation procedure.

Source: Residential ESS brochure / PDF page 8 / printed pages 15-16

EU 230 V

10.24 / 16.076 kWh | 6.2K-10/16KWH-EU / 12K-16KWH-EU

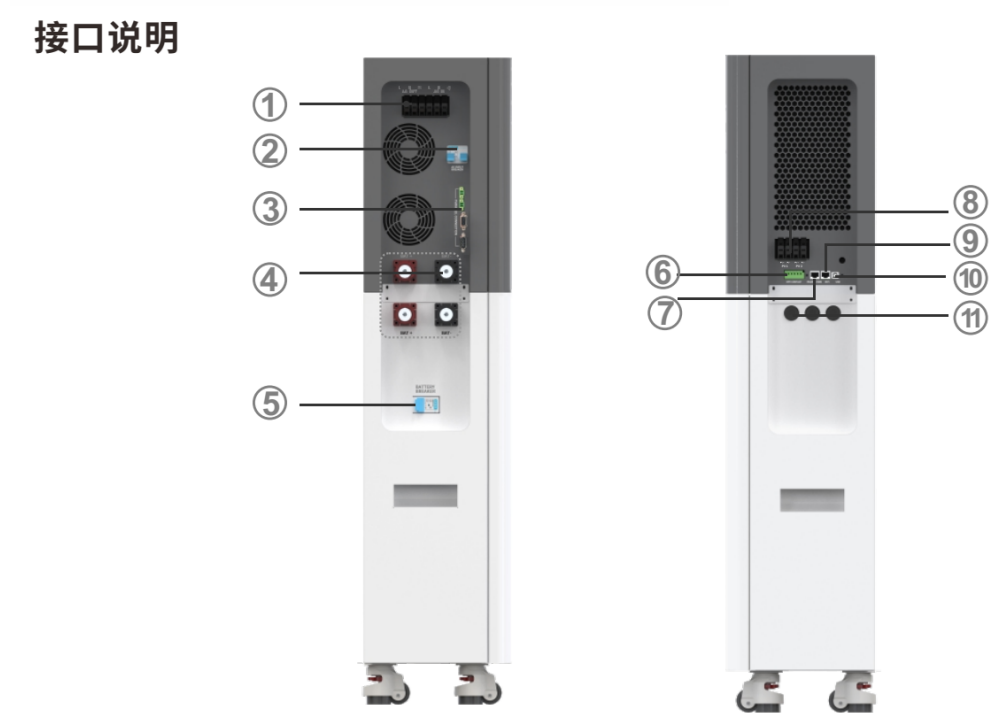

1. 交流输出/交流输入
2. 交流输入断路器
3. 并机通信端口
4. BAT+ BAT-
5. 电池断路器
6. 干节点控制
7. 光伏输入
8. RS485/BMS通信端口
9. Wi-Fi端口
10. USB通信端口
11. 电池通信端口

LABELLED FEATURES

1. AC input / output
2. AC input breaker
3. Parallel communication port
4. BAT+ / BAT-
5. Battery breaker
6. Dry contact control
7. PV input
8. RS485 / BMS communication port
9. Wi-Fi port
10. USB communication port
11. Battery communication ports

11 labelled features

01 / Original numbered map - English key at right

View coverage. Original numbers 1-11 and Chinese source captions are retained; the English key follows those numbers. Side-image detail is limited by the supplied source. No complete exterior-view set, pinout or wiring procedure is provided.

Source: EU 230 V product sheet / PDF page 1

EU 230 V / Detail views

10.24 / 16.076 kWh | 6.2K-10/16KWH-EU / 12K-16KWH-EU



02 / AC / battery side



03 / AC / battery upper detail



04 / PV / communication side



05 / PV / communication upper detail

View coverage. Original numbers 1-11 and Chinese source captions are retained; the English key follows those numbers. Side-image detail is limited by the supplied source. No complete exterior-view set, pinout or wiring procedure is provided.

Source: EU 230 V product sheet / PDF page 1

TR standard

5.12-20.07 kWh | TR4000WX / TR6000WX / TR8000WX / TR8500WX / TR10000WX



01 / Front controls and side-terminal labels

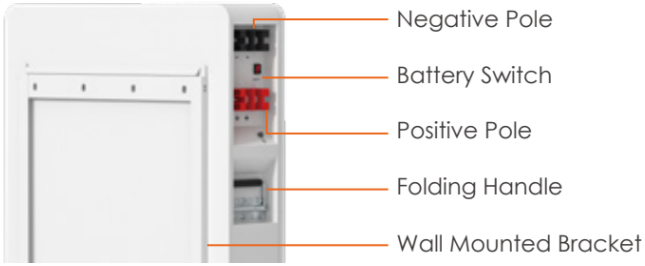

02 / Rear bracket / terminal labels



03 / Rear oblique view



04 / Side profile



05 / Control-switch photograph

LABELLED FEATURES

- Touch screen
- Running status indicator
- Alarm indicator
- SOC indicator
- Reset control
- Wi-Fi / Bluetooth
- Dry contact
- RS232 / CAN / RS485
- COM0 / COM1
- Negative battery terminal
- Battery switch
- Positive battery terminal
- Folding handle
- Wall-mounted bracket
- Rollers

15 labelled features

View coverage. The compact callout housing is not assigned to an individual model. The roller label specifically names TR8000WX and TR8500WX. Source views do not establish identical geometry or port placement across all five models.

Source: Residential ESS brochure / PDF page 3 / printed pages 5-6

TR Pro

10.24 / 16.076 kWh | TR6000WX-Pro / TR8500WX-Pro / TR8500WX-ProU

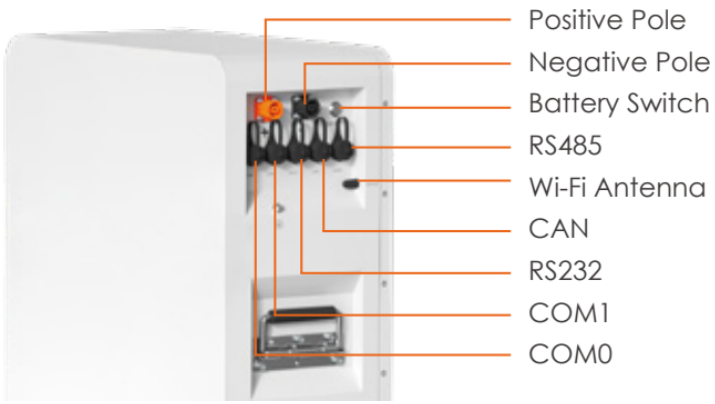

01 / Connection-side labels

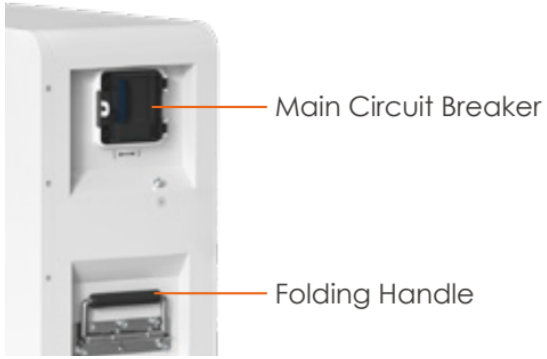

02 / Breaker and handle labels



03 / Connection-side view



04 / Side profile



05 / Original switch photograph

LABELLED FEATURES

- Breathing light
- Wall-mounted bracket
- Rollers
- Main circuit breaker
- Folding handle
- Positive battery terminal
- Negative battery terminal
- Battery switch
- RS485
- Wi-Fi antenna
- CAN
- RS232
- COM1
- COM0

14 labelled features

View coverage. The source illustrates a representative wheeled housing. Rollers are mechanical; Battery Switch and Main Circuit Breaker are separate labels. The full switch photograph does not add new interface claims beyond the printed source crop.

Source: Residential ESS brochure / PDF page 4 / printed pages 7-8

HP Ultra

8-48 kWh | HP Ultra-8.0 / HP Ultra-16.0 / HP Ultra-24.0 / HP Ultra-32.0 / HP Ultra-40.0 / HP Ultra-48.0

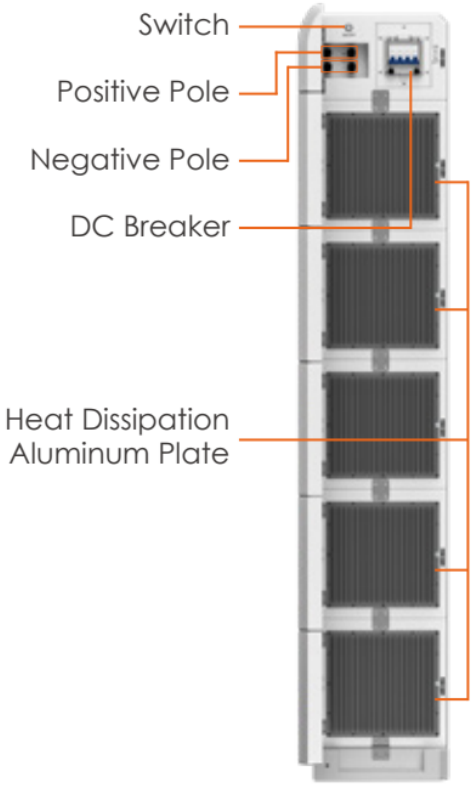

01 / DC electrical / heatsink face

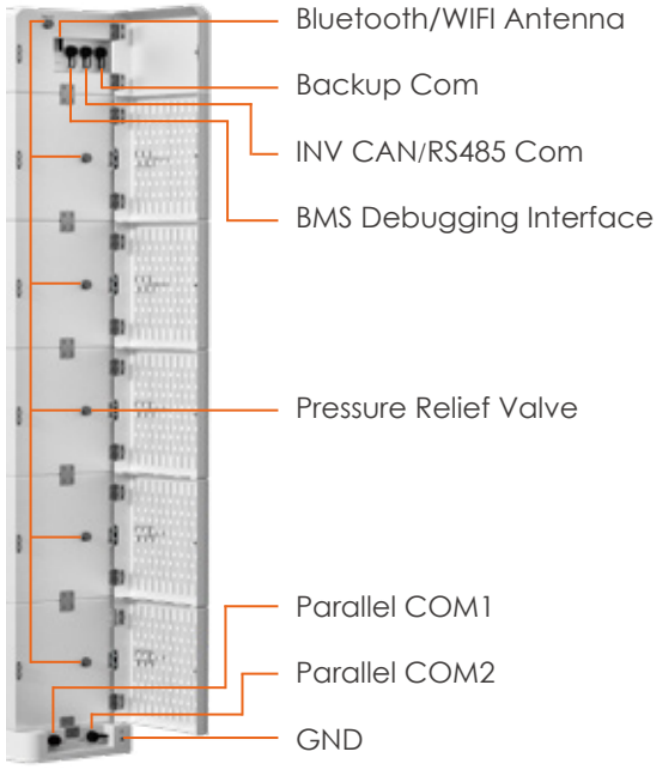

02 / Communication / parallel-interface face

LABELLED FEATURES

- Switch
- Positive Pole
- Negative Pole
- DC Breaker
- Heat Dissipation Aluminum Plate
- Breathing Light
- Wall Mounted Bracket
- PDU
- Module
- Base
- Bluetooth/WIFI Antenna
- Backup Com
- INV CAN/RS485 Com
- BMS Debugging Interface
- Pressure Relief Valve
- Parallel COM1
- Parallel COM2
- GND

18 labelled features

View coverage. Six specified 8-48 kWh configurations. DC electrical/heatsink and communication/parallel/GND labels belong to different illustrated faces. No underside, complete installed rear or activation interface is supplied. Source drawings are not installation photographs.

Source: Residential ESS brochure / PDF page 5 / printed pages 9-10

HP Ultra / Detail views

8-48 kWh | HP Ultra-8.0 / HP Ultra-16.0 / HP Ultra-24.0 / HP Ultra-32.0 / HP Ultra-40.0 / HP Ultra-48.0

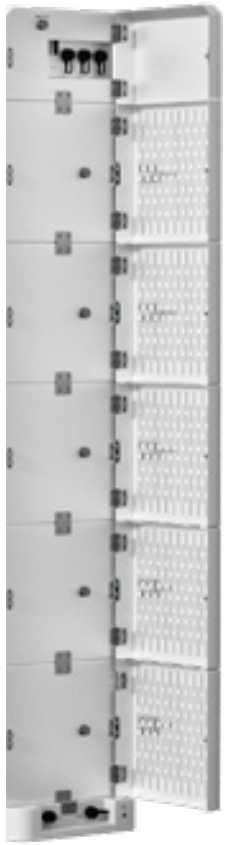

03 / Original communication-side detail



04 / Module top / mating surfaces

View coverage. Six specified 8-48 kWh configurations. DC electrical/heatsink and communication/parallel/GND labels belong to different illustrated faces. No underside, complete installed rear or activation interface is supplied. Source drawings are not installation photographs.

Source: Residential ESS brochure / PDF page 5 / printed pages 9-10

HP K

20.48-40.96 kWh | HP2000K / HP2500K / HP3000K / HP3500K / HP4000K

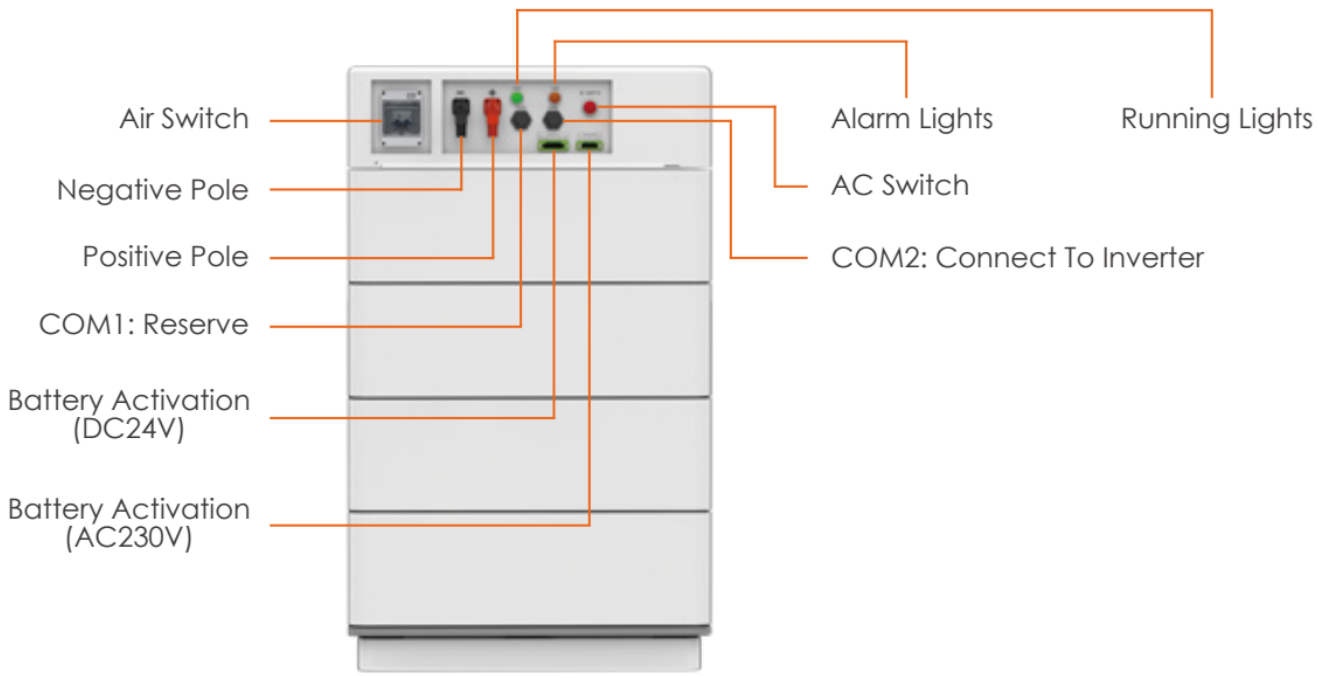

LABELLED FEATURES

- PDU
- Color Screen
- 5.12kWh
- Chassis
- Air Switch
- Negative Pole
- Positive Pole
- COM1: Reserve
- Battery Activation (DC24V)
- Battery Activation (AC230V)
- AC Switch
- COM2: Connect To Inverter
- Alarm Lights
- Running Lights
- Adjustable Status Indicator

15 labelled features

01 / Original connection/control-face labels

View coverage. The front diagram shows four 5.12 kWh sections; the family spans four to eight modules. COM1 is reserved and COM2 connects to the inverter. The control face is not explicitly named rear; HP Ultra port definitions are not transferred to this family.

Source: Residential ESS brochure / PDF page 6 / printed pages 11-12

HP K / Detail views

20.48-40.96 kWh | HP2000K / HP2500K / HP3000K / HP3500K / HP4000K



02 / Color-screen face



03 / Separated module stack illustration



04 / PDU connector/control detail



05 / Color-screen top-unit detail

View coverage. The front diagram shows four 5.12 kWh sections; the family spans four to eight modules. COM1 is reserved and COM2 connects to the inverter. The control face is not explicitly named rear; HP Ultra port definitions are not transferred to this family.

Source: Residential ESS brochure / PDF page 6 / printed pages 11-12

TB rack

5.12-16.076 kWh | TB4000X / TB6000X / TB8000X / TB8500X



01 / Original front terminal/control strip



02 / Original cells and BMS construction detail



03 / Negative terminal

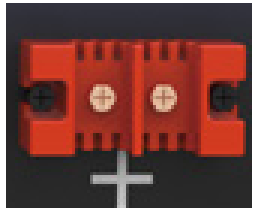

04 / Positive terminal

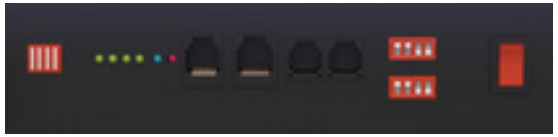

05 / Communication/control detail

LABELLED FEATURES

- Laser welding
- Steel holder
- Plastic steel belt (source wording)
- Built-in smart BMS
- Positive power terminal
- Portable handle
- Power switch
- Dry Connect (source label)
- COM0 / COM1 parallel ports
- CAN / RS485
- RS232
- SOC / ALM / RUN indicators
- Negative power terminal
- Address identification control

14 labelled features

View coverage. Front feature and internal construction illustrations may represent different hardware revisions. No external rear-view photograph is supplied. Internal details must not be presented as rear/underside photographs or disassembly instructions.

Source: Residential ESS brochure / PDF page 7 / printed pages 13-14